HONDA

INSTALLATION INSTRUCTIONS

Accessory	Application	Publications No.
FOG LIGHTS P/N 08V31-SZT-100B	2013 CR-Z	All 13106
		Issue Date NOV 2012

PARTS LIST

Left fog light



Right fog light

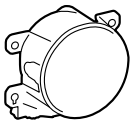

Left fog light cover

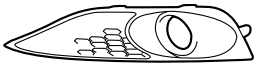

Right fog light cover

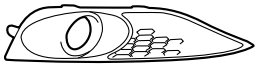

Light switch

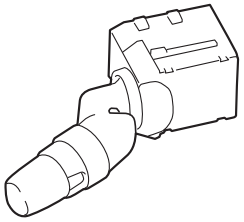

Relay harness

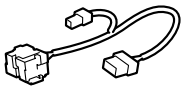

Fog light harness

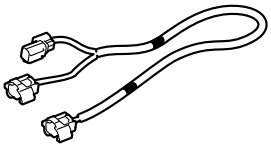

Subharness



Relay

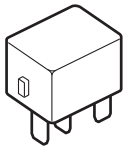

20A Fuse

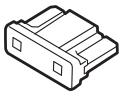

Fuse label

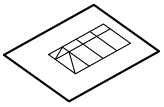

6 Self-tapping screws, 5 x 16 mm



12 Wire ties

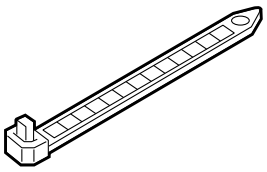

Wire tie with holder

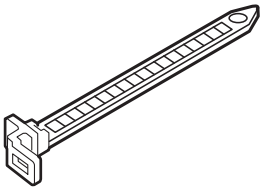

Wire tie with clip

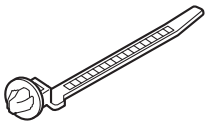

Connector clip



© 2012 American Honda Motor Co., Inc. – All Rights Reserved.

Relay bracket



2 Aluminum tapes

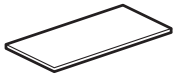

TOOLS AND SUPPLIES REQUIRED

Phillips screwdriver
Ratchet
10 mm Socket
Isopropyl alcohol
Shop towel
Diagonal cutters
10 mm Open end wrench
Flat-tip screwdriver
Blanket
Drill
3 mm and 9 mm Drill bits
Eye protection (face shield, safety goggles etc.)
Masking tape
Pushpin
File
Ruler

The following tool is available through the Honda Tool and Equipment Program. On the iN, click on: Service > Service Bay > Tool and Equipment Program, then enter the number under "Search". Or, call 888-424-6857.

• Trim Tool Set (T/N SOJATP2014)

Illustration of the Fog Lights on the Vehicle

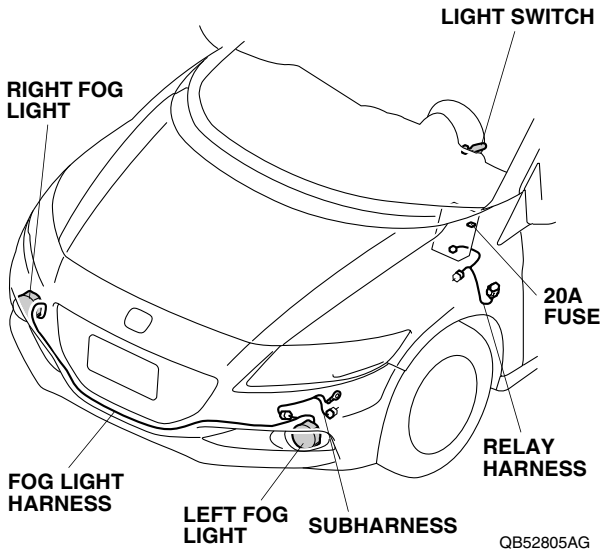

INSTALLATION

Customer Information: The information in this installation instruction is intended for use only by skilled technicians who have the proper tools, equipment, and training to correctly and safely add equipment to your vehicle. These procedures should not be attempted by "do-it-yourselfers."

1. Make sure you have the anti-theft codes for the audio unit and navigation system (if equipped), then write down the radio station presets.
2. Disconnect the negative cable from the battery.
3. Remove the fuse lid (four retaining tabs).

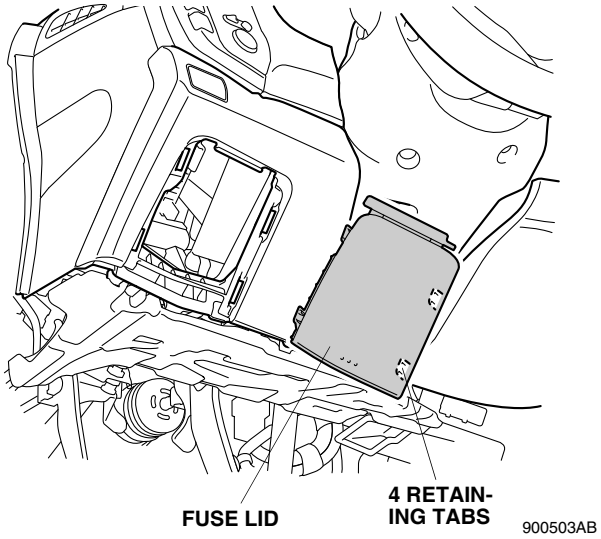

© 2012 American Honda Motor Co., Inc. – All Rights Reserved.

4. Remove the driver's under cover (turn the knob, two clips, and one pin).

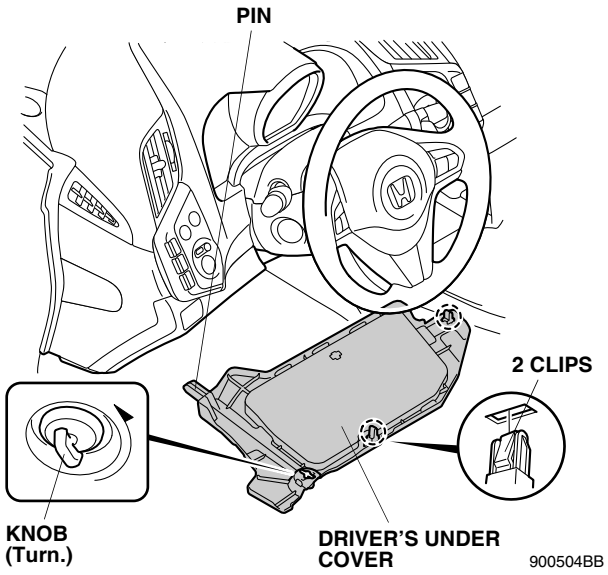

5. Insert a flat-tip screwdriver into the guide on the under side of the steering column lower cover and release the retaining tab.

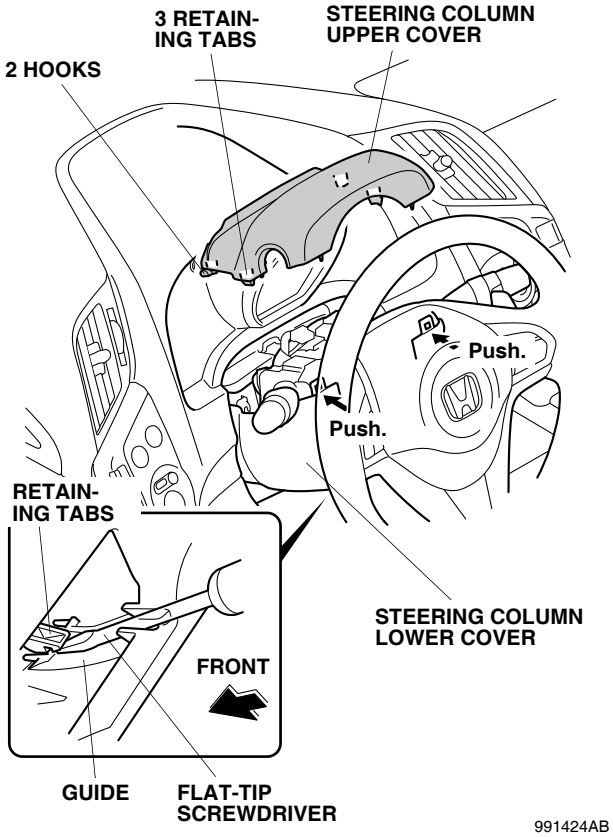

6. Remove the steering column upper cover (three retaining tabs and two hooks).

7. Remove the steering column lower cover (three self-tapping screws).

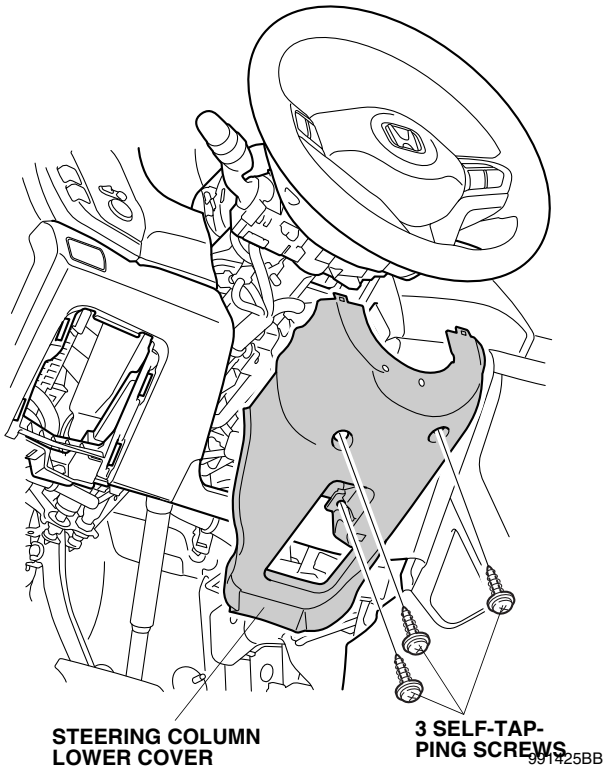

8. Pull away the door seal from around the driver's kick panel, and remove the driver's kick panel (two clips and three retaining tabs).

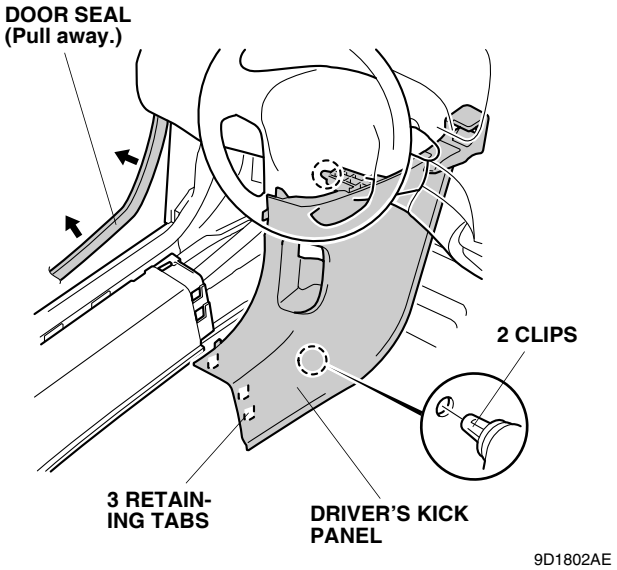

© 2012 American Honda Motor Co., Inc. – All Rights Reserved.

9. Attach masking tape to the front bumper, headlights and front fenders as shown.

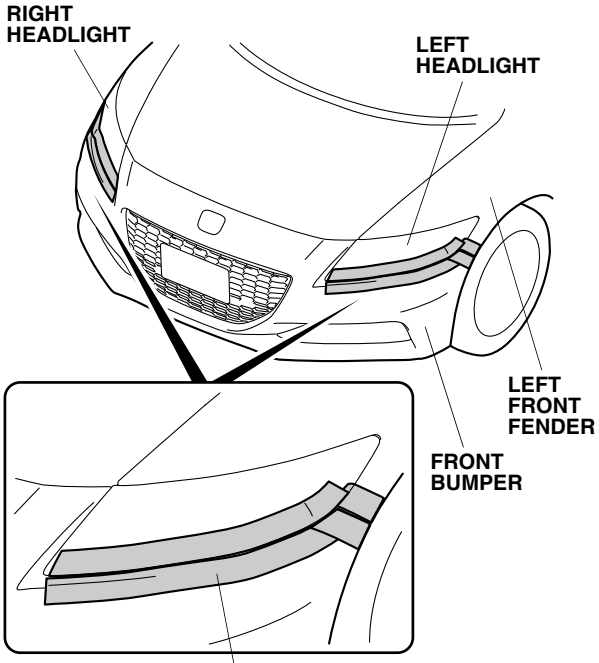

10. Remove the front bumper.
    - Remove the front bumper molding (six clips).

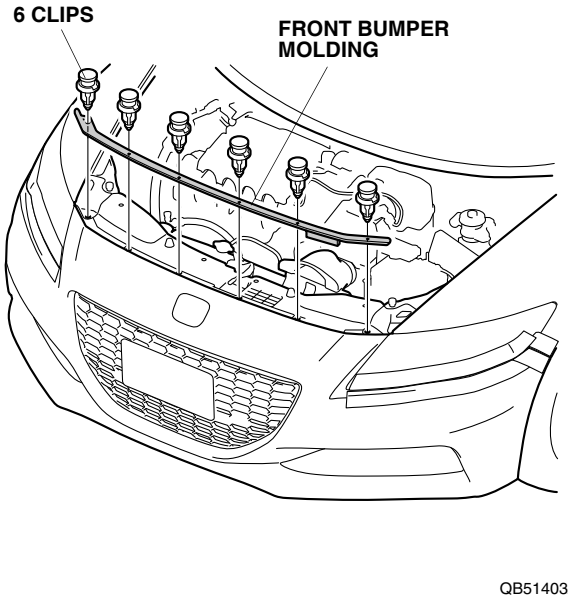

- Remove eleven clips, four self-tapping screws, and two washer-screws.

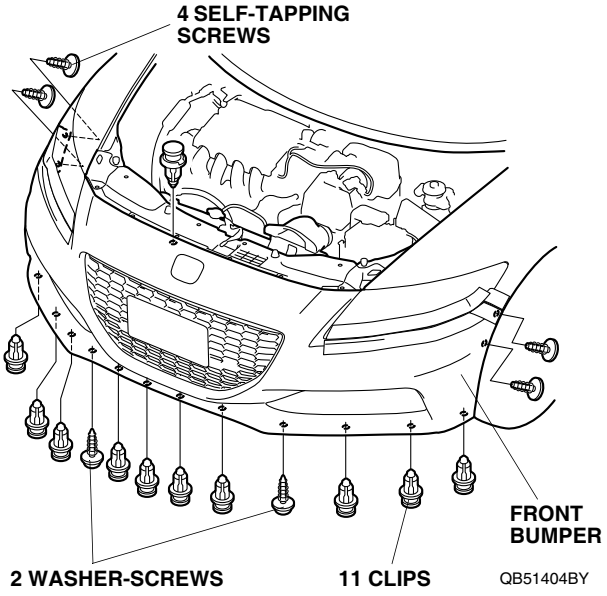

- Release two retaining tabs on each side of the bumper.

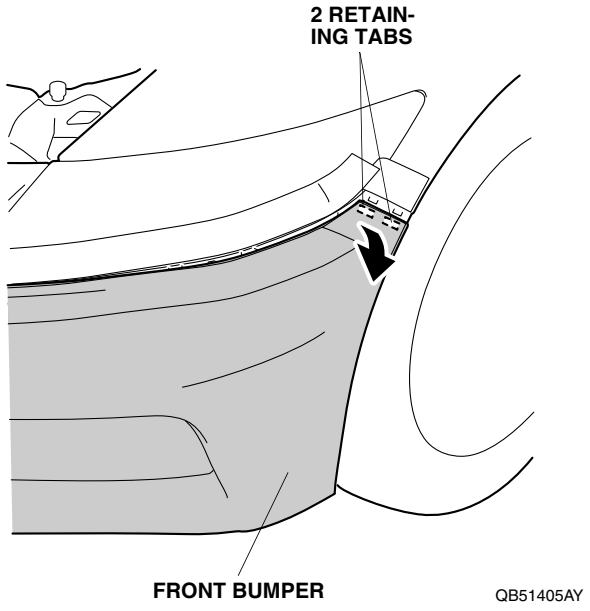

© 2012 American Honda Motor Co., Inc. – All Rights Reserved.

- Release four retaining tabs on each side of the bumper.

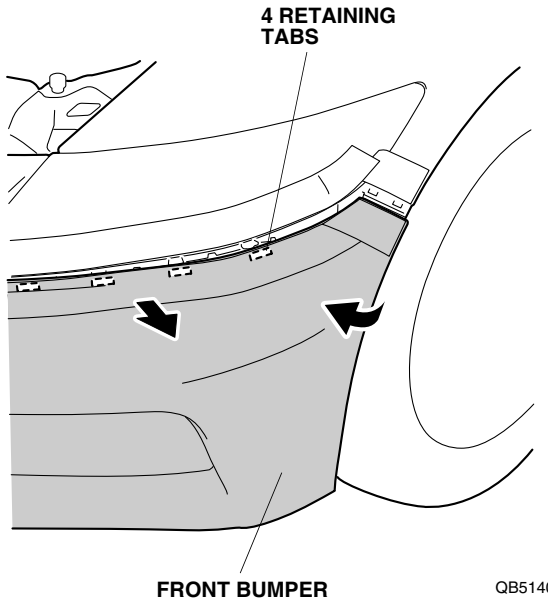

- With the help of an assistant, remove the front bumper.
- Place the front bumper on a blanket.

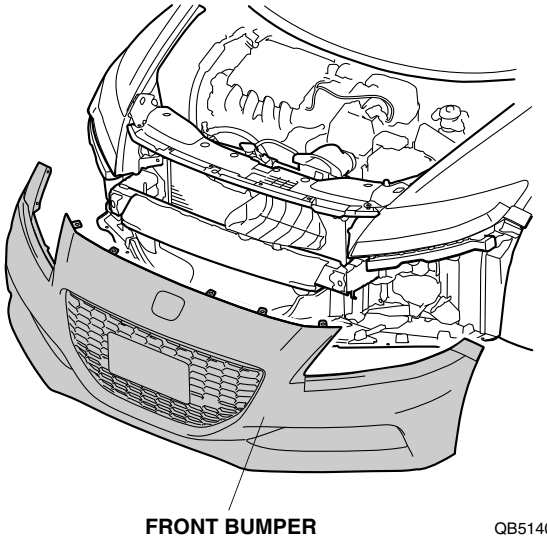

11. Remove the left cover from the front bumper (one clip and eight retaining tabs).

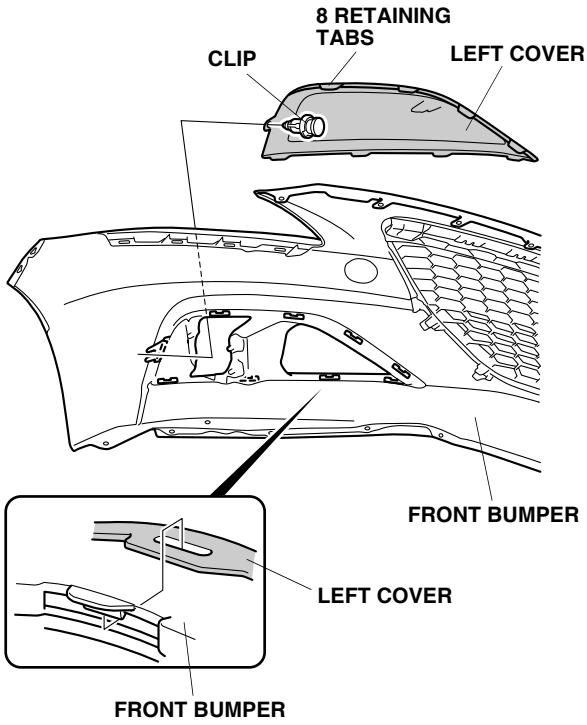

12. Using a pushpin, pierce the front bumper at the measurement shown.

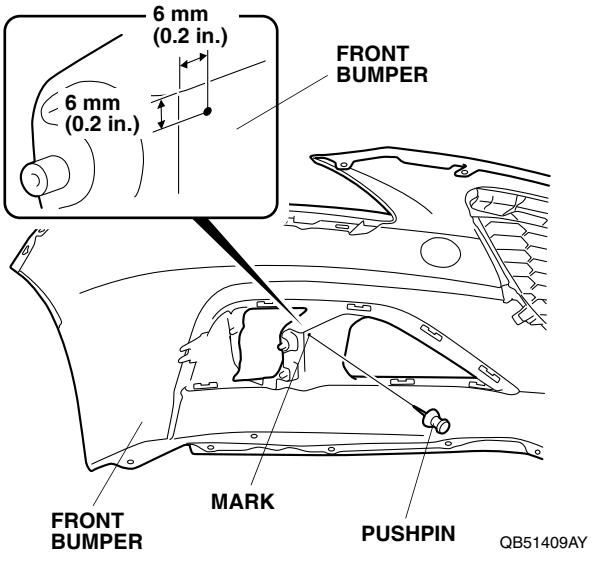

© 2012 American Honda Motor Co., Inc. – All Rights Reserved.

13. While wearing eye protection, drill the pierced mark in the front bumper with a 3 mm drill bit.

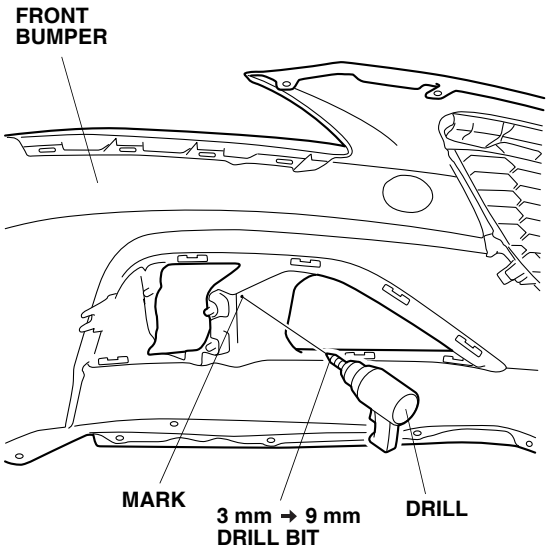

14. Enlarge the 3 mm hole to 9 mm using a 9 mm drill bit. Remove any burrs.
15. While wearing eye protection, drill the front bumper at the three dimples with a 3 mm drill bit. Remove any burrs.

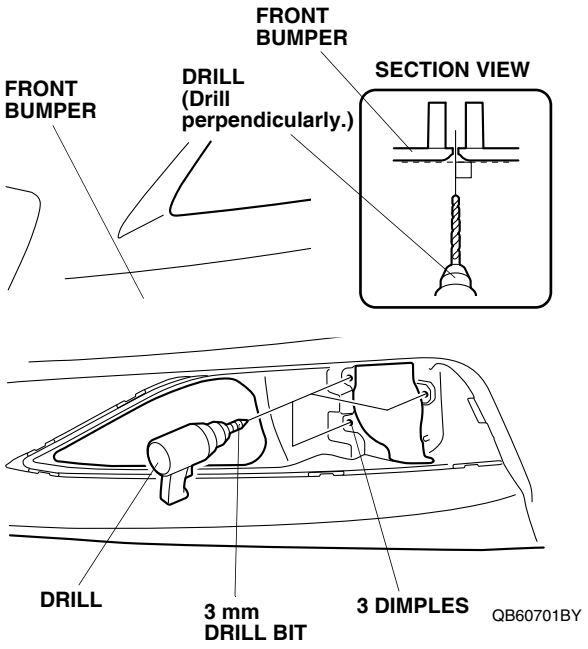

16. Install the left fog light to the front bumper with three 5 x 16 mm self-tapping screws.

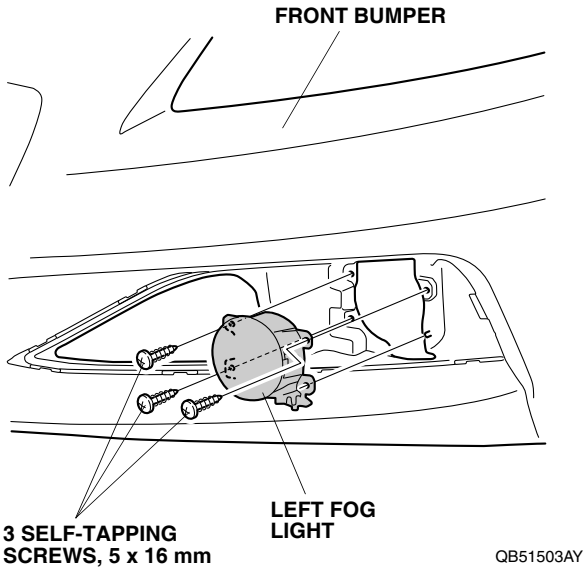

17. Install the left fog light cover to the front bumper with eight retaining tabs and one clip removed in step 11.

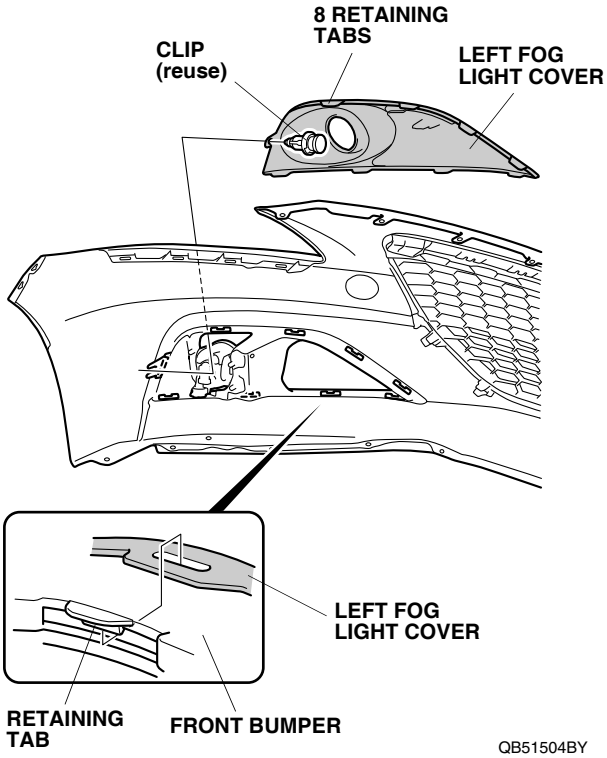

18. Repeat steps 11 through 17 on the other side to install the right fog light.

© 2012 American Honda Motor Co., Inc. – All Rights Reserved.

19. Plug the fog light harness 2-pin connector into the left fog light.

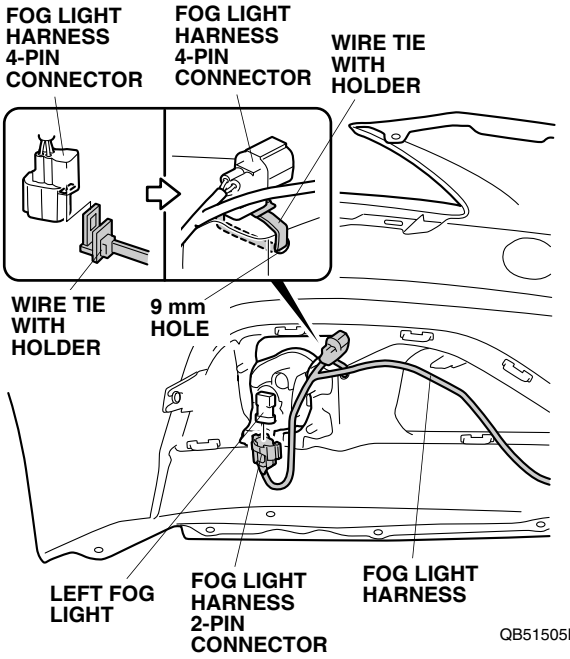

20. Attach the wire tie with holder to the fog light harness 4-pin connector.
21. Secure the fog light harness 4-pin connector to the front bumper with the wire tie with holder.

22. Route the fog light harness. Align the green tape on the fog light harness with the front grille and secure the fog light harness to the front grille with one wire tie.

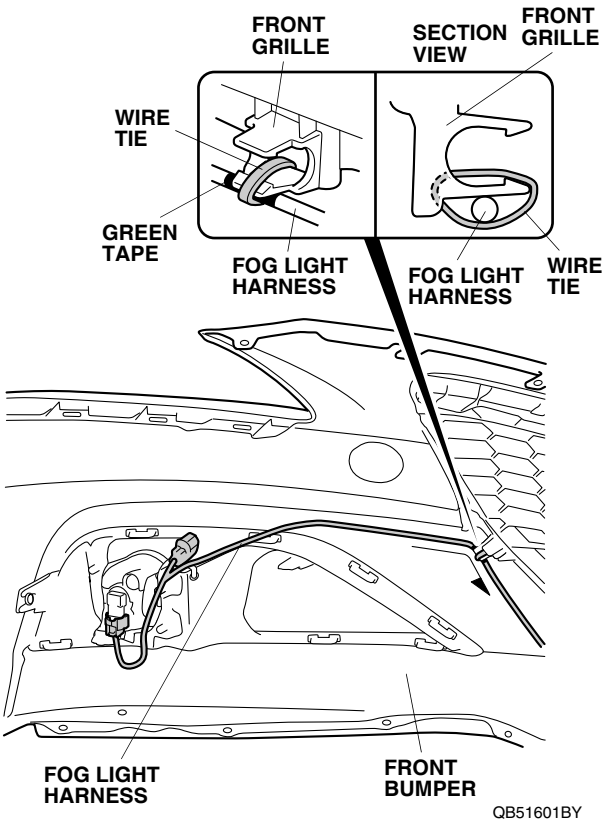

23. Route the fog light harness, and plug the fog light harness 2-pin connector into the right fog light.

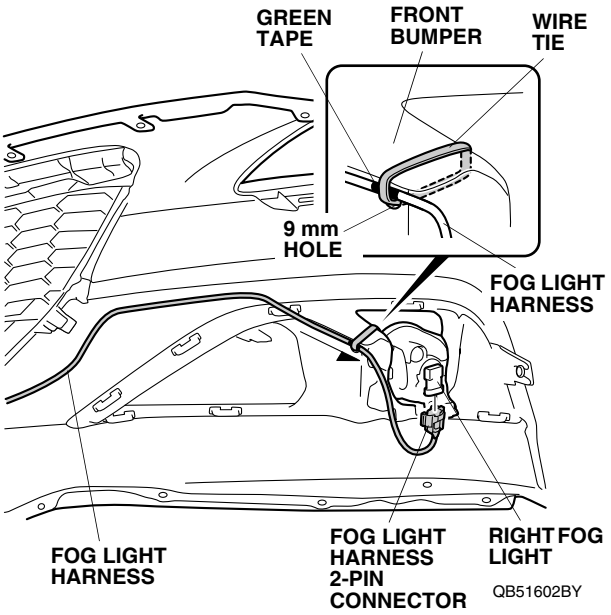

24. Align the green tape on the fog light harness to the 9 mm hole and secure the fog light harness to the front bumper with one wire tie.

© 2012 American Honda Motor Co., Inc. – All Rights Reserved.

25. Secure the fog light harness to the front grille with five wire ties.

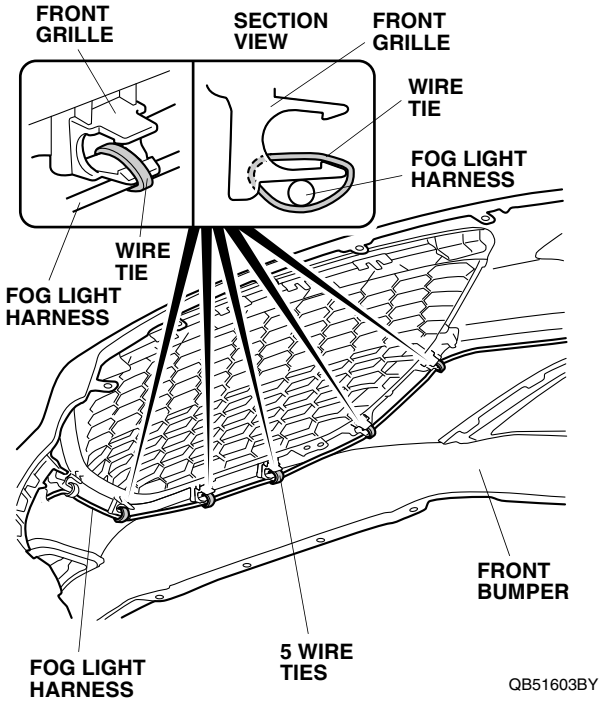

26. Using isopropyl alcohol on a shop towel, thoroughly clean the front bumper where the aluminum tape will attach.

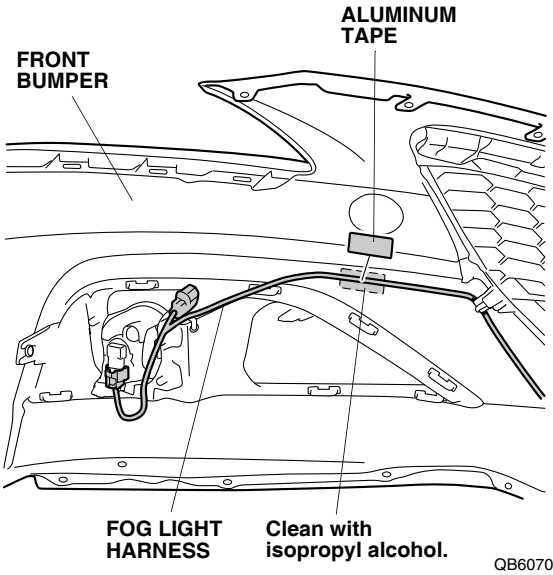

27. Secure the fog light harness to the front bumper with one aluminum tape.

28. Using isopropyl alcohol on a shop towel, thoroughly clean the front bumper where the aluminum tape will attach.

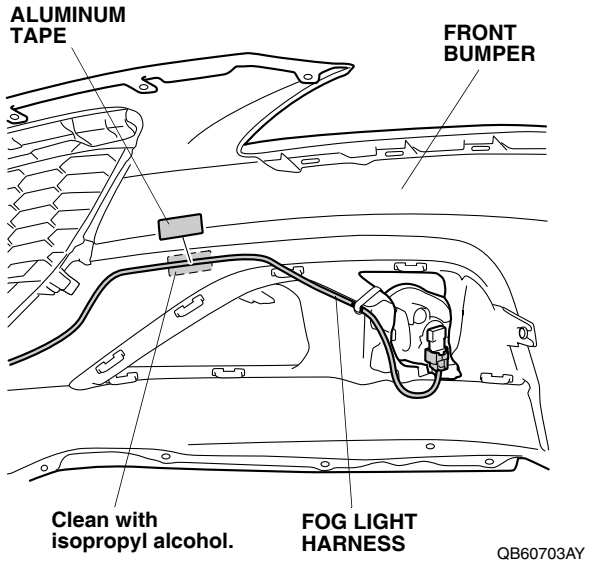

29. Secure the fog light harness to the front bumper with one aluminum tape.

30. Plug the subharness 1-pin connector into the vehicle 1-pin connector below the left headlight.

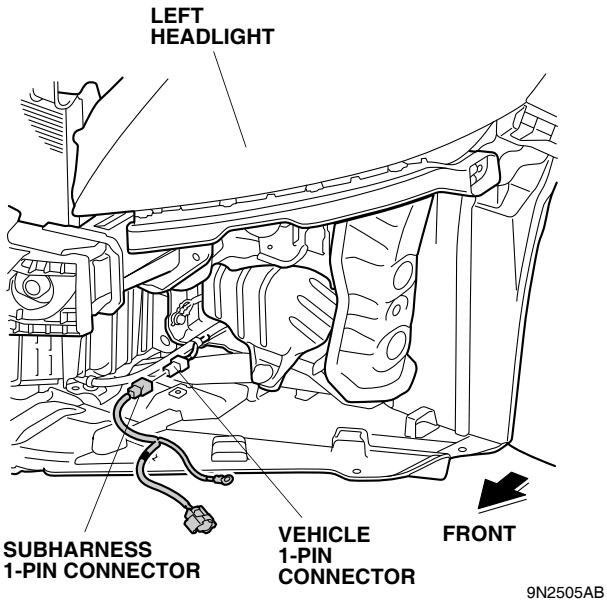

© 2012 American Honda Motor Co., Inc. – All Rights Reserved.

31. Just above the subharness 1-pin connector, locate the vehicle ground bolt. Remove the vehicle ground bolt, and install the ground terminal from the subharness using the vehicle ground bolt.

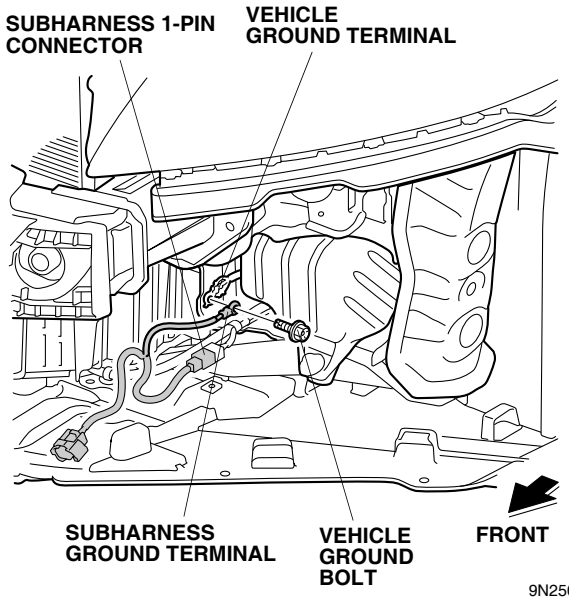

32. Locate the green tape on the subharness. Install the wire tie with clip to subharness at the green tape. Insert the wire tie with clip into the hole in the vehicle frame.

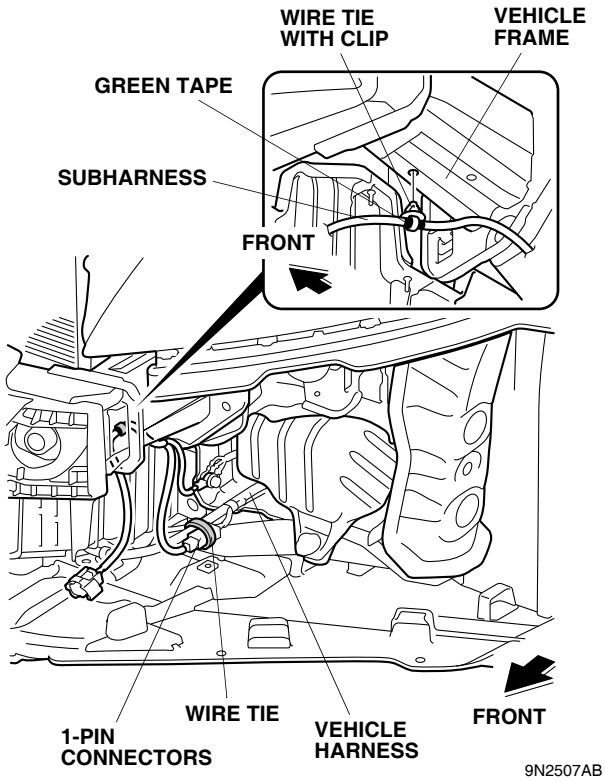

33. Secure the 1-pin connectors to the vehicle harness with one wire tie.

34. With the help of an assistant, bring the front bumper close to the vehicle. Plug the subharness 4-pin connector into the fog light harness 4-pin connector and reinstall the front bumper.

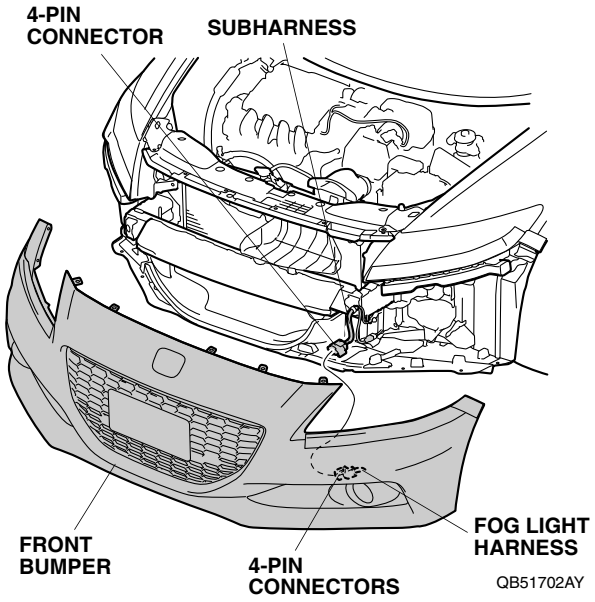

35. Get relay harness. Install the relay into the relay block.

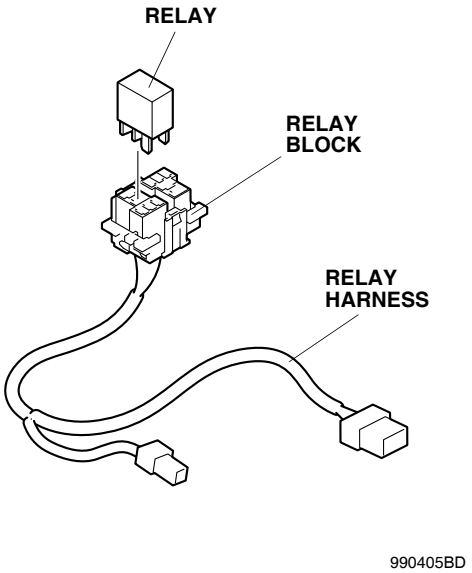

© 2012 American Honda Motor Co., Inc. – All Rights Reserved.

36. Plug the relay harness 8-pin connector into the 8-pin connector on the fuse box.

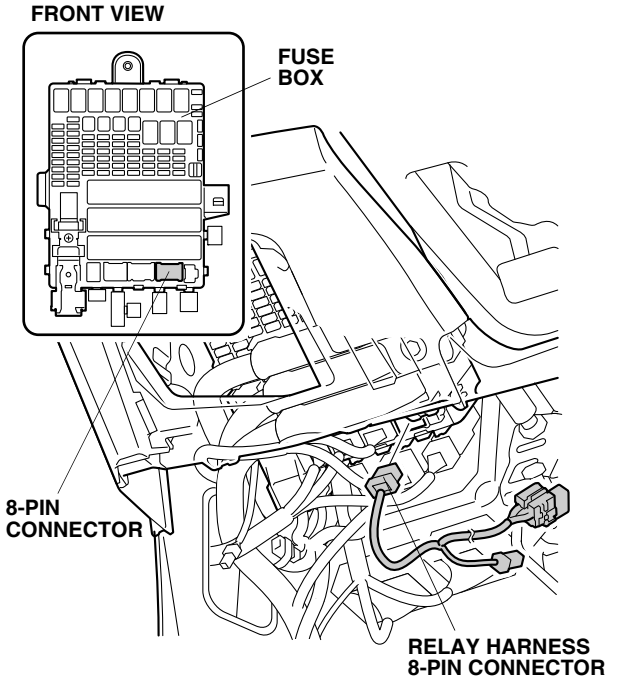

NOTE: If the 8-pin connector is already used by other accessory, locate the 8-pin connector taped to that other accessory harness. Remove the tape and dummy connector from that other accessory harness. Plug the fog light harness 8-pin connector into that other accessory harness.

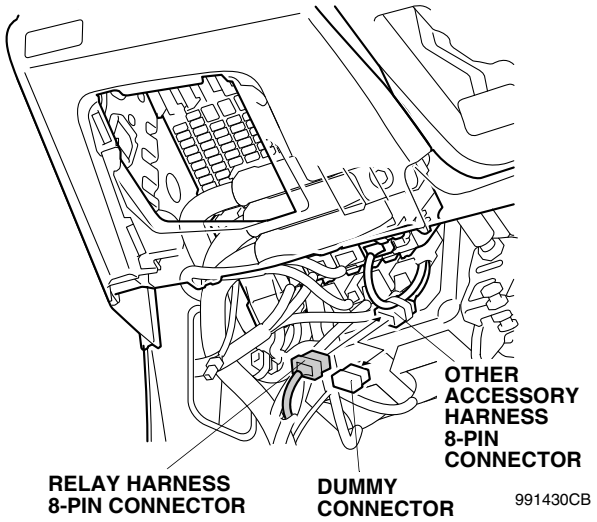

37. Plug the relay harness 1-pin connector into the vehicle 1-pin connector.

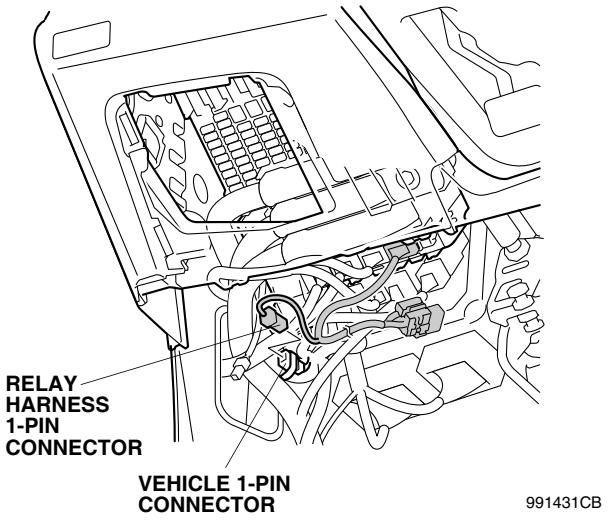

38. Remove lower hood opener bolt, and secure the relay bracket to the vehicle panel with the hood opener bolt.

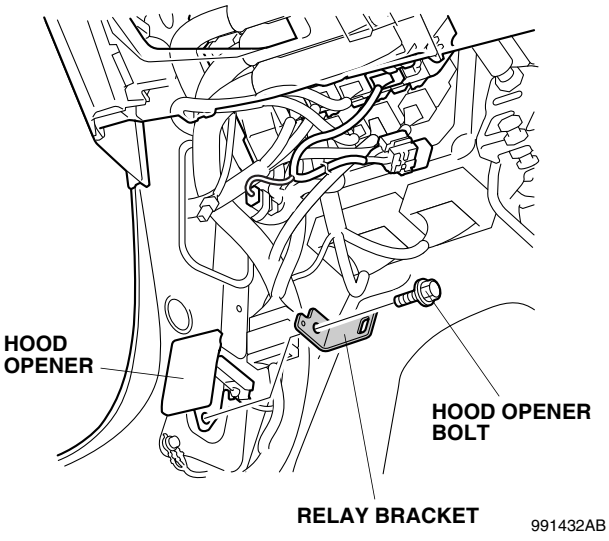

© 2012 American Honda Motor Co., Inc. – All Rights Reserved.

39. Install the connector clip to the relay block on the relay harness.

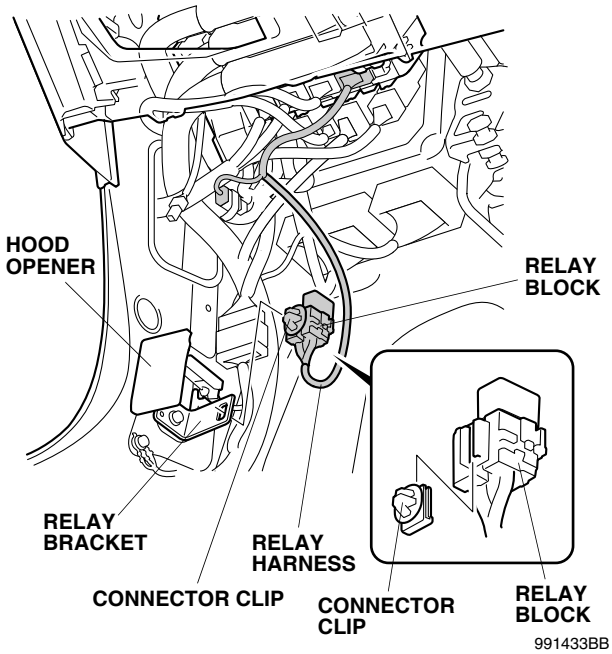

40. Secure the relay block connector clip to the relay bracket.
41. Secure the relay harness to the vehicle harness with four wire ties.

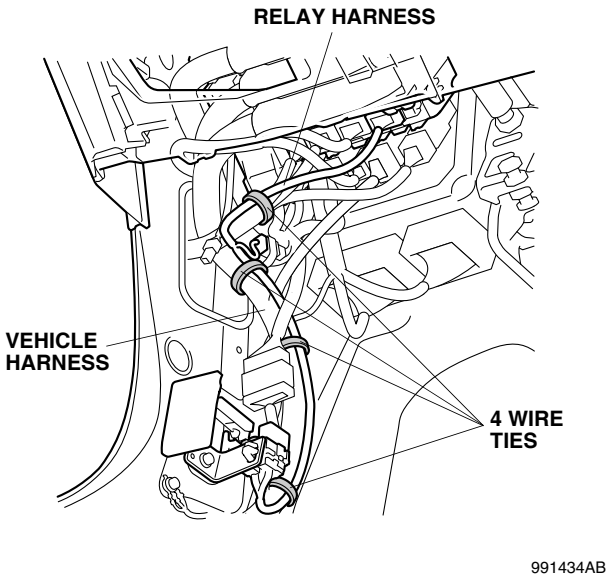

42. Turn the steering wheel counterclockwise. Unplug the vehicle connector from the light switch.

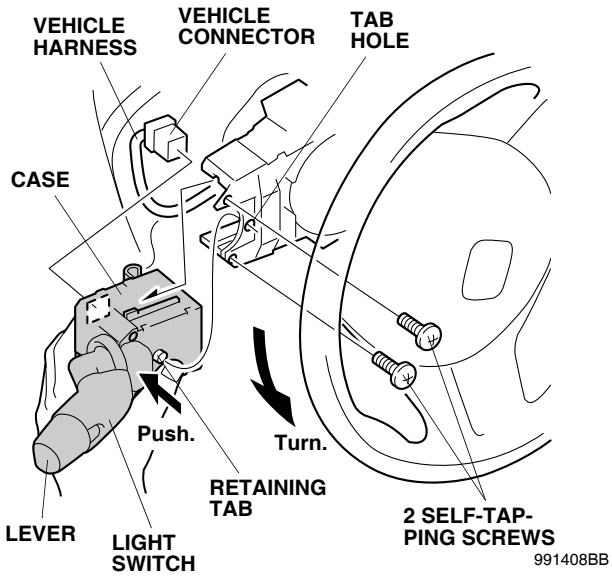

43. Remove two self-tapping screws from the light switch. While pushing the case, slide the light switch case and remove it from the steering column. Do not pull on the lever when removing the case. Do not damage the tab hole on the steering column.
44. Install the new light switch to the steering column with two self-tapping screws. Do not push on the lever when installing the case. Push in on the case and set the retaining tab into the tab hole.

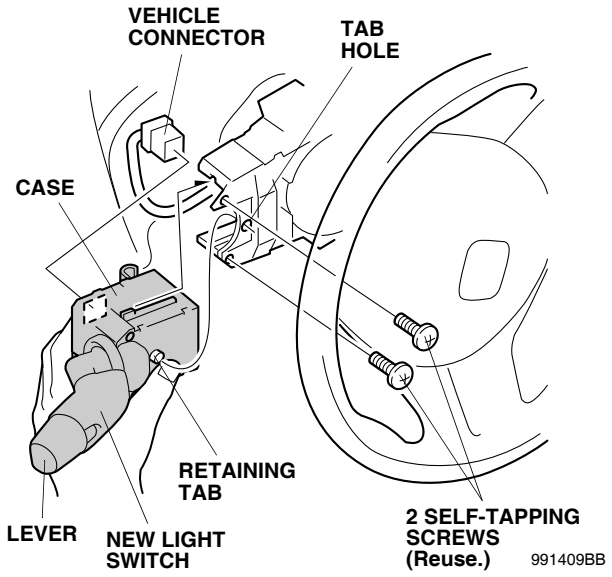

45. Plug the vehicle connector to the new light switch. Make sure the vehicle harness is not being stretched.

© 2012 American Honda Motor Co., Inc. – All Rights Reserved.

46. If a fuse is already installed in the fuse box, go to step 47, otherwise, plug the 20A fuse into the fuse box.

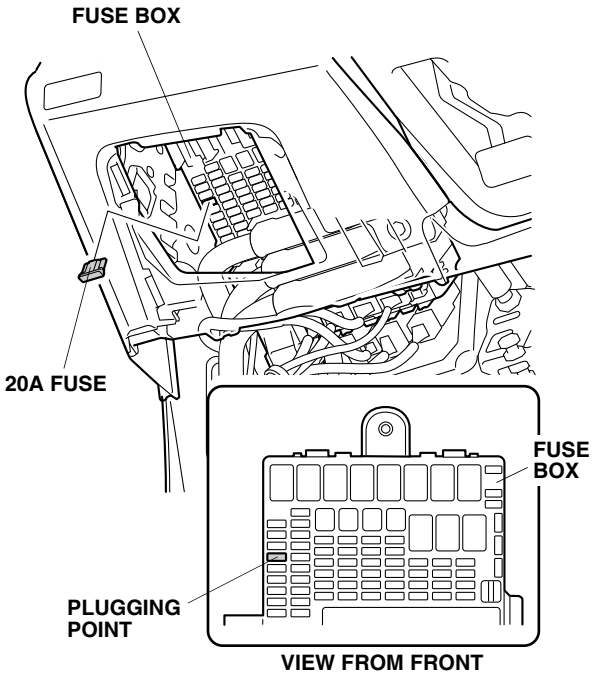

47. If a option fuse 20A label is already attached to the fuse seal, go to step 48. Otherwise, use an isopropyl alcohol on a shop towel, thoroughly clean the area where the fuse label will attach. Attach the 20A fuse label to the fuse seal on the fuse lid.

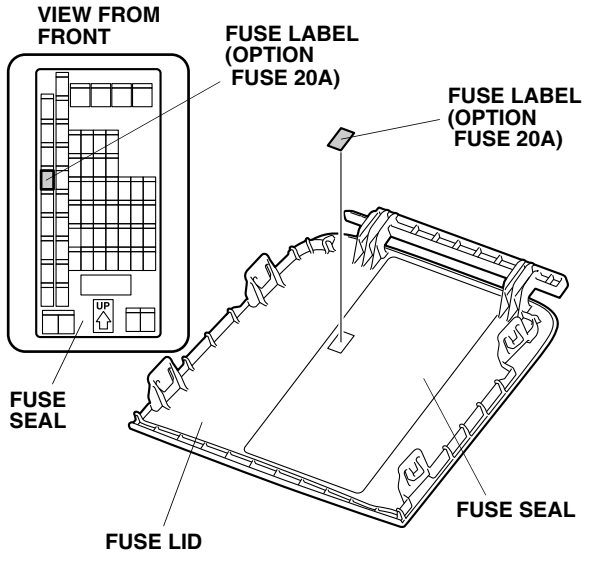

48. Using an isopropyl alcohol on a shop towel, thoroughly clean the fuse lid where the blank fuse label will attach. Attach the fuse label to the fuse seal of on the fuse lid as shown.

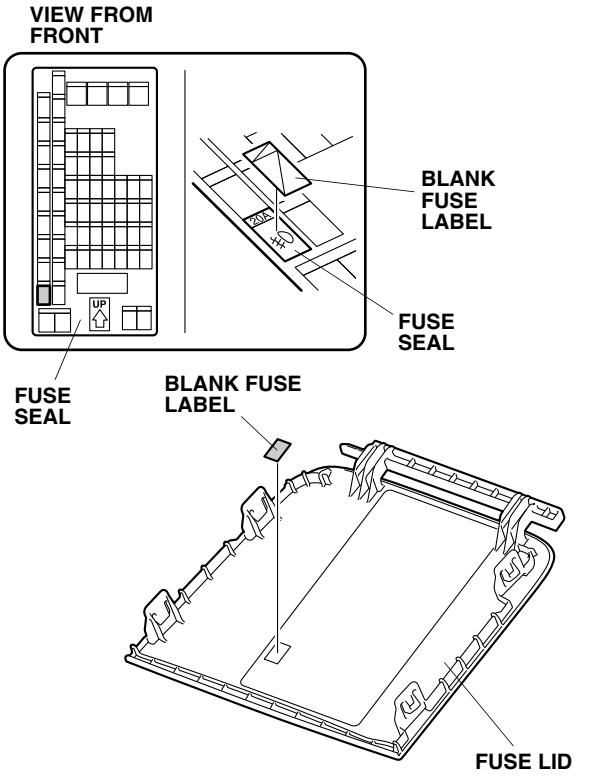

49. Check that all wire harness are routed properly and all connectors are plugged in.
50. Reinstall all removed parts.
51. Enter the customer's audio and navigation system (if equipped) anti-theft codes, and reset the radio station presets.
52. Reconnect the negative cable to the battery.
53. Reset the clock.
54. If the IMA battery level gauge display is at zero, start the engine, and hold it between 3,500 rpm and 4,000 rpm (without load) in P or N position until the IMA battery level gauge display is at least half charged level.

© 2012 American Honda Motor Co., Inc. – All Rights Reserved.

Use and Care

How to Operate the Fog Lights

- Turn the headlight switch to the "≡D" position (headlights on low beam).
- Turn the fog light switch on (indicator is on).

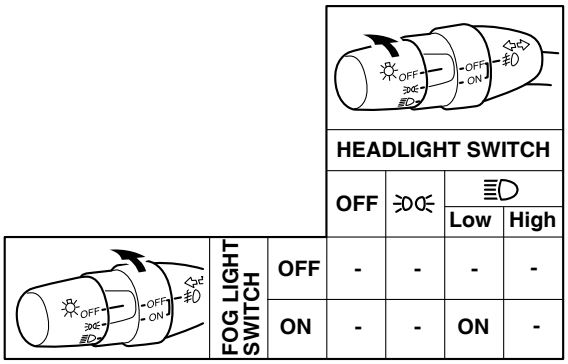

053101AB

NOTE: The fog light lenses can cloud when the outside temperature is cold; this is normal and should go away in warm weather.

- If the fog lights do not turn on, check the fuse and all the connectors, including the ground cable.

How to Aim the Fog Lights

- To adjust, turn the aim adjustment screw in or out until the correct aim is obtained.
- Adjust the aim according to local laws and regulations.

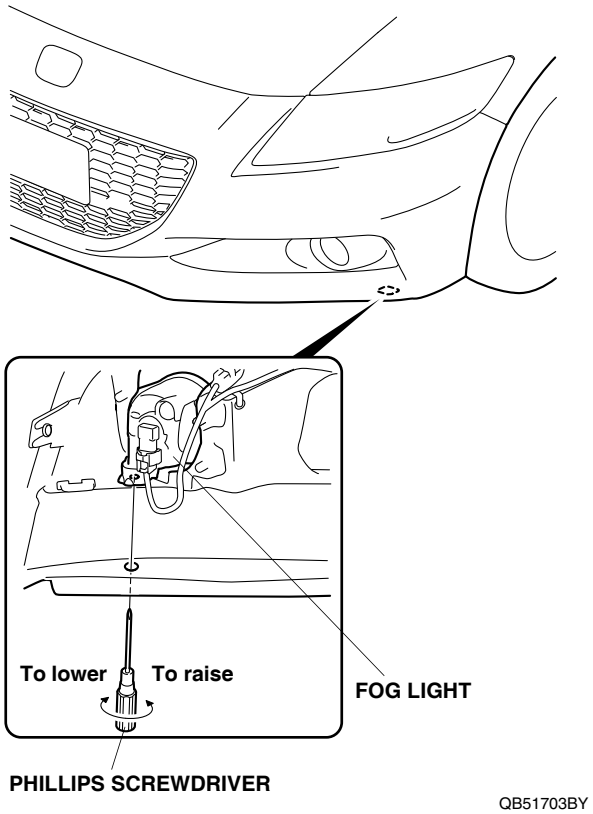

QB51703BY

© 2012 American Honda Motor Co., Inc. – All Rights Reserved.

BULB REPLACEMENT

1. Release the inner fender (one washer-screw and two clips).

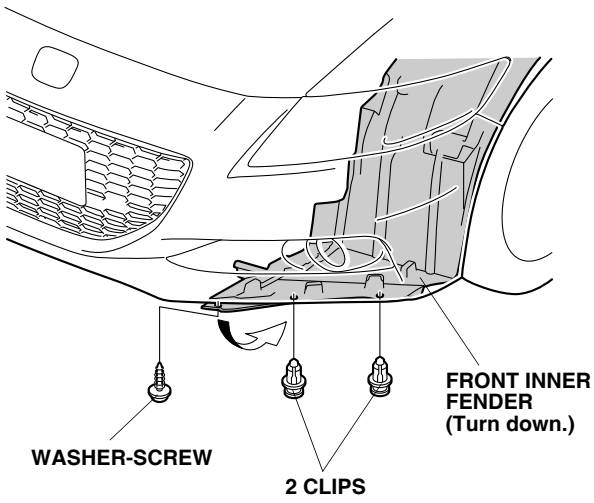

2. Insert your hand inside of the inner fender released in step 1. Unplug the connector from the fog light, and remove the bulb.

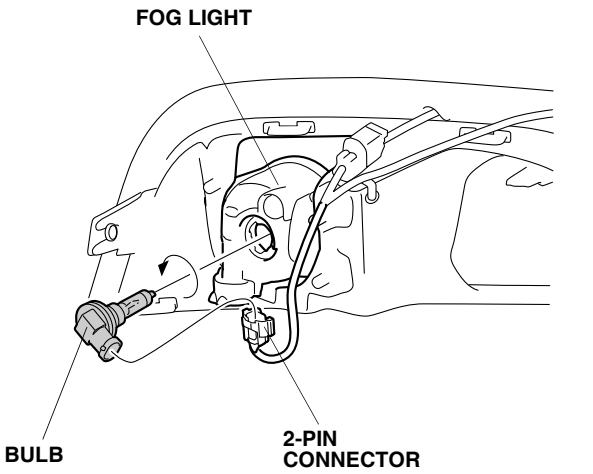

3. Install the new bulb to the fog light.
   - Use only a genuine Honda halogen light bulb of specified wattage.
     Rating: 12V 35W H8 Halogen Light Bulb
     P/N33165-TL0-0030
   - Do not touch the bulb. Oily or greasy substances on the bulb can shorten its service life due to the heat produced when the bulb is turned on. If the bulb is accidentally touched, wipe it clean with a soft cloth that has been dampened with a denatured alcohol or a mild detergent solution.
   - When installing the new bulb, align the cutout on the fog light with the tab on the new bulb and turn the new bulb in completely. If not properly aligned, the fog light may annoy the oncoming driver's view.

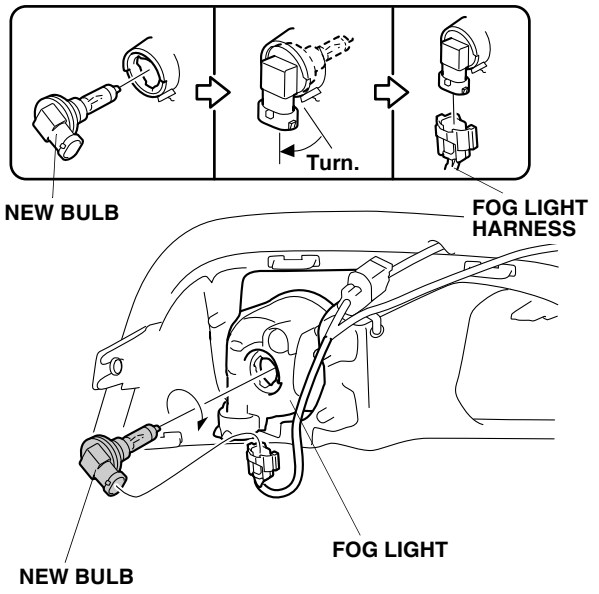

4. Reinstall the removed parts in the reverse order of removal.
   - Check that the wire harness are not pinched.
   - Be sure to tighten the clip and bolts securely.
5. Check the operation of the fog light; re-adjust the aiming if necessary.

© 2012 American Honda Motor Co., Inc. – All Rights Reserved.