HONDA

INSTALLATION INSTRUCTIONS

Accessory	Application	Publications No.
SIDE STEPS	2012 PILOT	All 46399
		Issue Date AUG 2011

PARTS LIST

P/N 08L33-SZA-100 (BLACK)
P/N 08L33-SZA-100A (CHROME)

Right side step

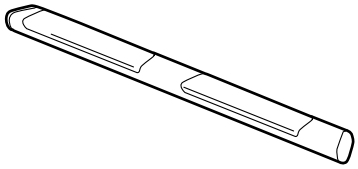

Left side step

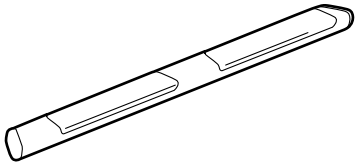

Right bracket A

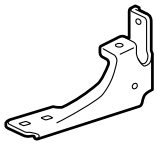

Left bracket A

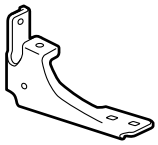

2 Right brackets B

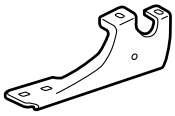

2 Left brackets B

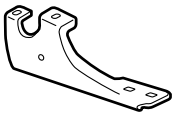

24 Flange bolts

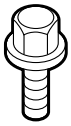

2 Rivet Nuts

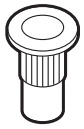

TOOLS AND SUPPLIES REQUIRED

Torque wrench

Socket

Rivet nut tool
T/N LEML722M8

27 mm Wrench

Hex wrench

Illustration of the Side Steps Installed on the vehicle

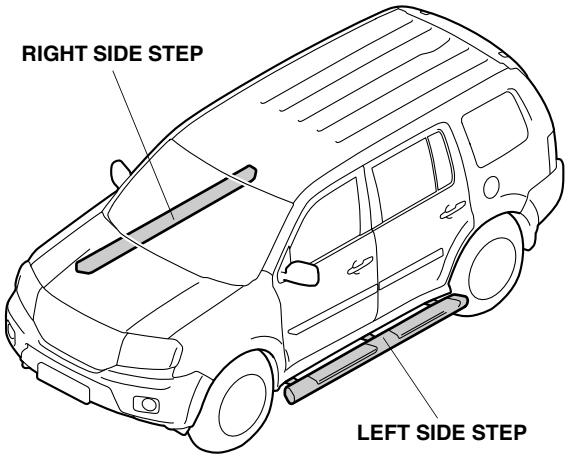

© 2011 American Honda Motor Co., Inc. – All Rights Reserved.

INSTALLATION

Customer Information: The information in this installation instruction is intended for use only by skilled technicians who have the proper tools, equipment, and training to correctly and safely add equipment to your vehicle. These procedures should not be attempted by "do-it-yourselfers."

NOTE:

- Thoroughly clean the bottom of the body from the rear of the front wheels to the front of the rear wheels.
- Be careful not to damage the paint finish. To prevent damage, place a blanket under the side step during the installation.
- These instructions show the left side step being installed; the same procedure applies to installing the right side step.

1. Install the rivet nut into the vehicle frame as shown.

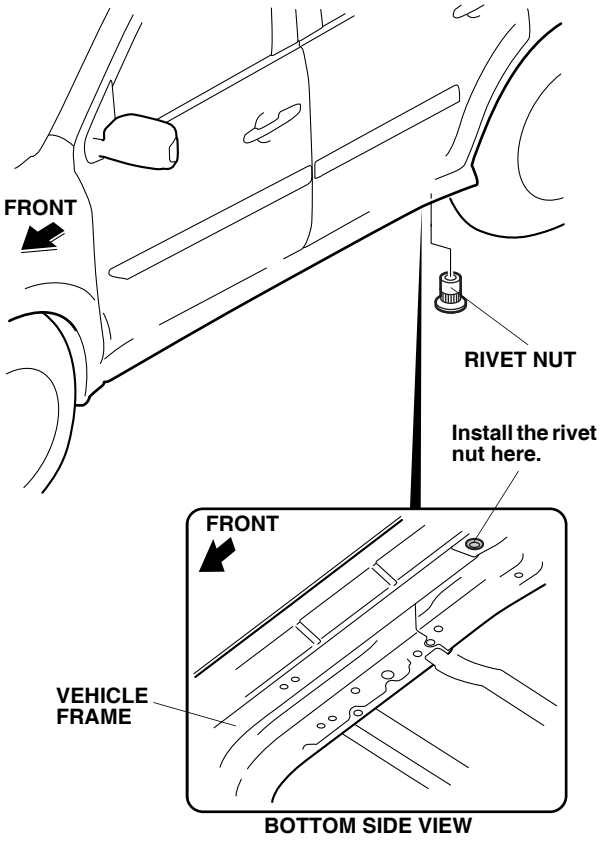

- Screw the rivet nut onto the mandrel of the rivet nut tool as shown.

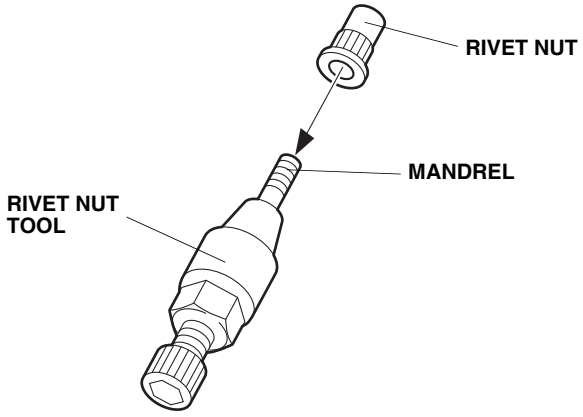

- Insert the rivet nut into the hole in the vehicle frame and install the hex wrench on the rivet nut tool.

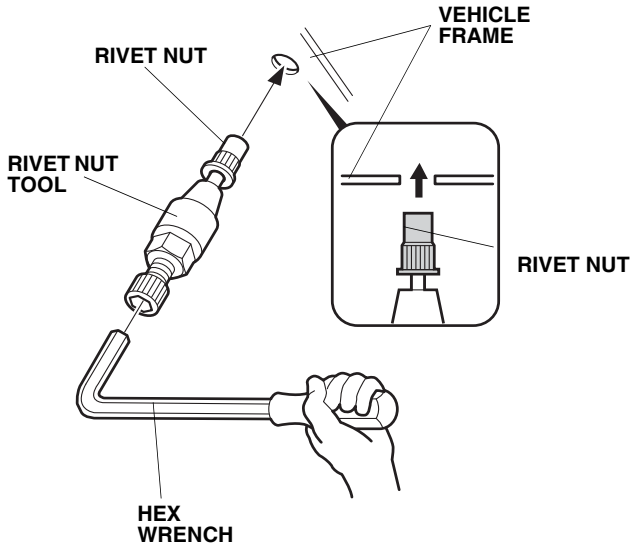

© 2011 American Honda Motor Co., Inc. – All Rights Reserved.

- Holding the rivet nut tool with the hex wrench, turn the 27 mm wrench clockwise and install the rivet nut in the vehicle frame.
- Remove the rivet nut tool from the rivet nut by turning the hex wrench counterclockwise.

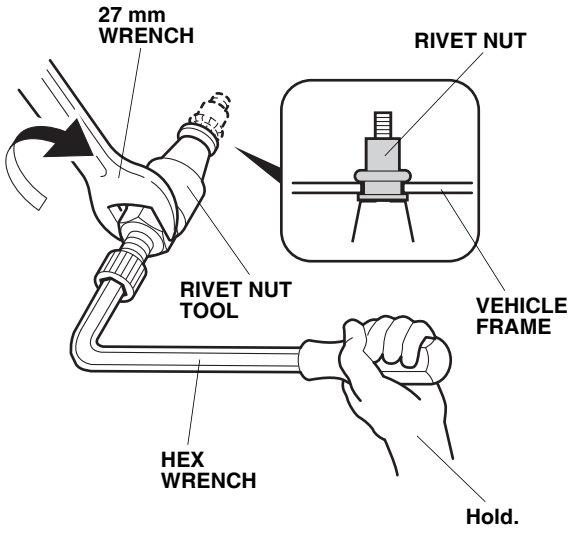

2. Install the left bracket A on the vehicle frame with two flange bolts. Do not tighten the flange bolts yet. Make sure the flange bolts are installed in the correct locations.

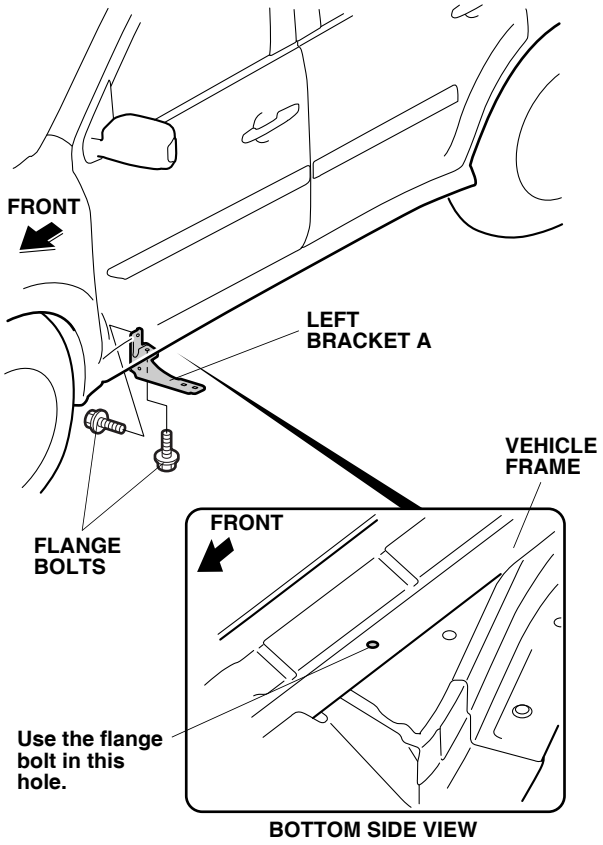

© 2011 American Honda Motor Co., Inc. – All Rights Reserved.

3. Install the two left brackets B on the vehicle frame using two flange bolts in each. Do not tighten the flange bolts yet. Make sure the flange bolts are installed in the correct locations.

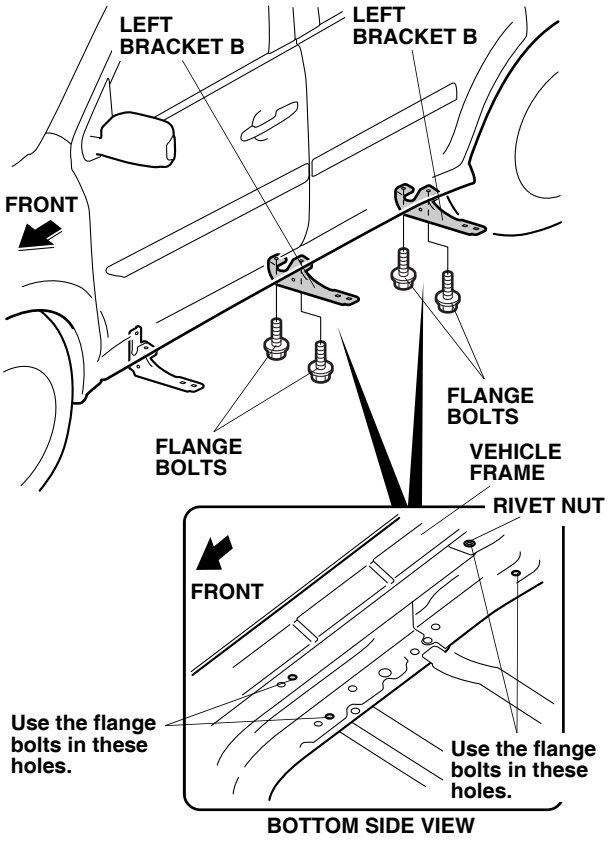

4. Position the left side step on the left bracket A and two left brackets B. Install the left side step with six flange bolts. Torque the flange bolts to 27 N·m (19 lbf·ft).

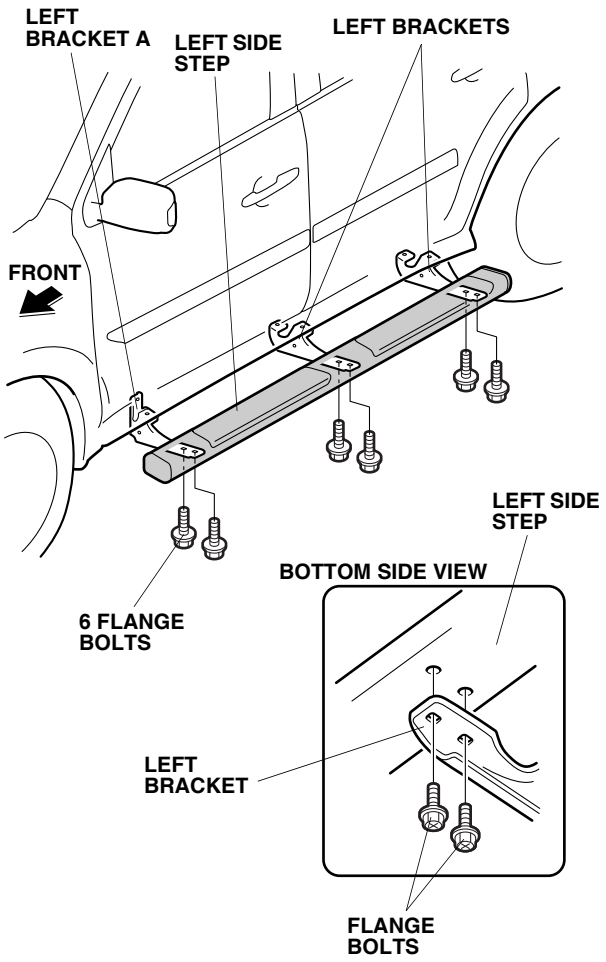

5. Tighten the six flange bolts that were loosely installed in step 2 and step 3. Torque the flange bolts to 27 N·m (19 lbf·ft).
6. Repeat steps 1 through 5 to install the side step on the right side of the vehicle.

© 2011 American Honda Motor Co., Inc. – All Rights Reserved.