HONDA

INSTALLATION INSTRUCTIONS

Accessory	Application	Publications No.
18" ALUMINUM WHEEL P/N 08W18-TP6-100	2012 CROSSTOUR	All 46163
		Issue Date JULY 2011

PARTS LIST

Aluminum wheel



(The illustration may differ from the actual wheel.)

Wheel center cap

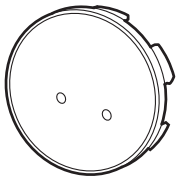

(The illustration may differ from the actual center cap.)

Center cap emblem



2 Push nuts



Tire pressure information label

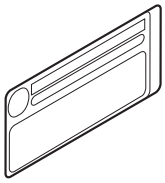

Wheel cleaning information

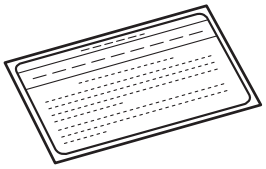

Parts for TPMS sensor assembly

Tire pressure sensor assembly

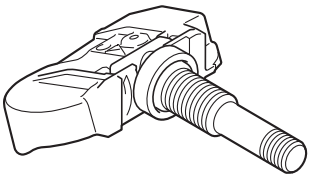

Washer



Valve cap

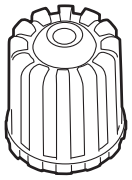

Valve nut

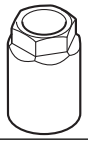

TOOLS AND SUPPLIES REQUIRED

Ratchet
11 mm Socket
Torque wrench (CDI1501MRPH)
Isopropyl alcohol
Shop towel
Service Manual
HDS with latest software
ATEQ VT55 with software version CH1-09 or later

© 2011 American Honda Motor Co., Inc. – All Rights Reserved.

SPECIFICATIONS

Rim size	18 x 7 J (inset 55)	
Tire size	225/60R18 100H	
Bolt hole PCD	114.3 (5 holes)	
Tire pressure	Front	220 kpa (2.2 kgf/cm^2, 32 psi)
	Rear	220 kpa (2.2 kgf/cm^2, 32 psi)

INSTALLATION

Customer Information: The information in this installation instruction is intended for use only by skilled technicians who have the proper tools, equipment, and training to correctly and safely add equipment to your vehicle. These procedures should not be attempted by "do-it-yourselfers."

NOTE:

- This aluminum wheel is designed for use on vehicles equipped with TPMS (Tire Pressure Monitoring System).
- This aluminum wheel is equipped with a TPMS sensor. See the service manual for tire replacement procedure and TPMS sensor installation procedure.
- Install the correct size tire.
- The wheel nut torque is 108 N·m (80 lbf·ft).
- Use a tire changer to install and remove the tires. Do not use tire levers to install and remove the tires as they may cause damage to the tire or the aluminum wheel.
- Be careful not to damage the wheel center cap when installing the emblems.
- This center cap emblem should be installed only if the ambient air temperature is 15°C (60°F) or above.
- To allow the adhesive to cure, do not wash the vehicle for 24 hours. Please advise your customer.

1. Using isopropyl alcohol on a shop towel, clean the area where the center cap emblem will attach.

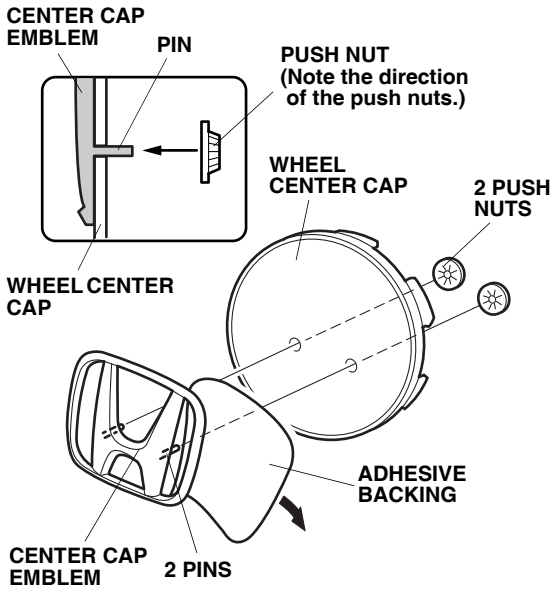

2. Remove the adhesive backing from the center cap emblem.
3. Attach the center cap emblem to the wheel center cap by aligning its pins with the holes in the wheel center cap. After attaching, hold the emblem firmly against the wheel center cap with the palm of your hand for 30 seconds.
4. Slide the push nuts onto the pins. Note the direction of the push nuts.

AII 46163 (1107)
© 2011 American Honda Motor Co., Inc. – All Rights Reserved.

5. Before installing the tire pressure sensor, clean the mating surface on the sensor and the aluminum wheel.

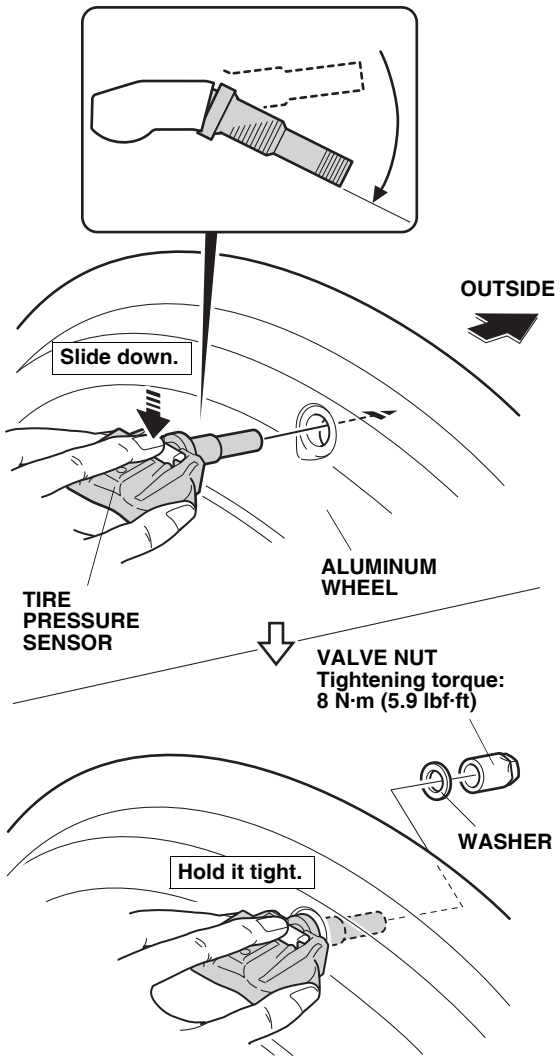

6. Install the tire pressure sensor and the washer on the aluminum wheel, and tighten the valve nut finger tight. Make sure the pressure sensor is resting on the wheel.
7. While holding the tire pressure sensor to keep it from rotating, torque the valve nut to 8 N·m (5.9 lbf·ft). You may hear a snap or pop as you torque the nut; this is normal.

NOTE:

- Check the grommet on the tire pressure sensor to make sure it is seated fully.
- Make sure the valve stem does not protrude into the sensor housing surface.
- So it does not get caught on the bead when installing the tire, install the tire pressure sensor so the sensor housing surface does not protrude into the bead area of the wheel.
- Do not reuse grommets that had been tightened, even one time, to the specified torque, as they are deformed inside.
- Do not use pneumatic or electric tools on the valve nut.
- Tightening the nut above the specified torque can damage the grommet.

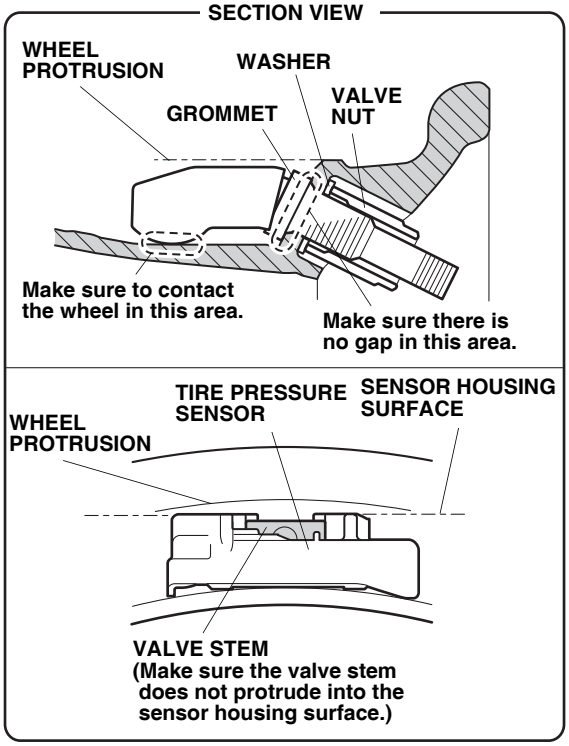

INSIDE VIEW OF THE ALUMINUM WHEEL

8. Install the tires according to the instructions in the service manual.
9. Install the wheels on the vehicle and torque them to 108 N·m (80 lbf·ft).

© 2011 American Honda Motor Co., Inc. – All Rights Reserved.

On Models equipped with standard 18" wheels, the tire pressure information label is not used, go to step11.

10. ***Without standard 18" wheels:*** Open the driver's door. Using isopropyl alcohol on a shop towel, clean the area where the tire pressure information label will attach. Remove the adhesive backing from the label, and attach it over the existing tire pressure information label.

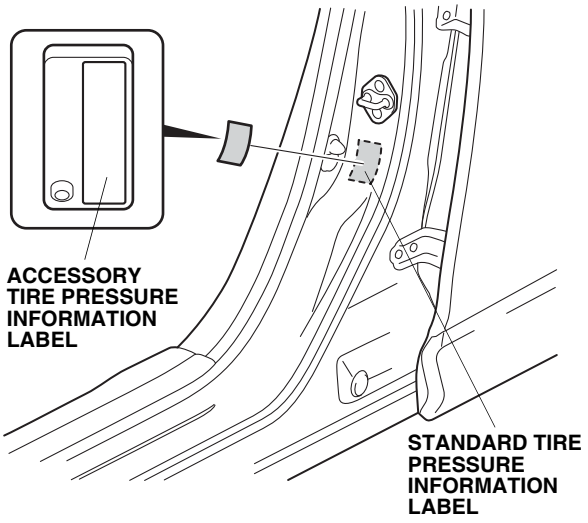

MEMORIZING THE TIRE PRESSURE SENSOR ID

11. Using the HDS and AETEQ VT55 TPMS tool, memorize the tire pressure sensor IDs according to the instructions in the service manual (Memorizing the Tire Pressure Sensor ID).

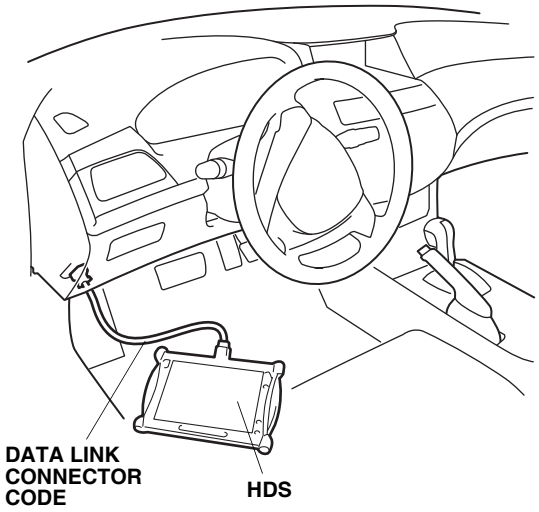

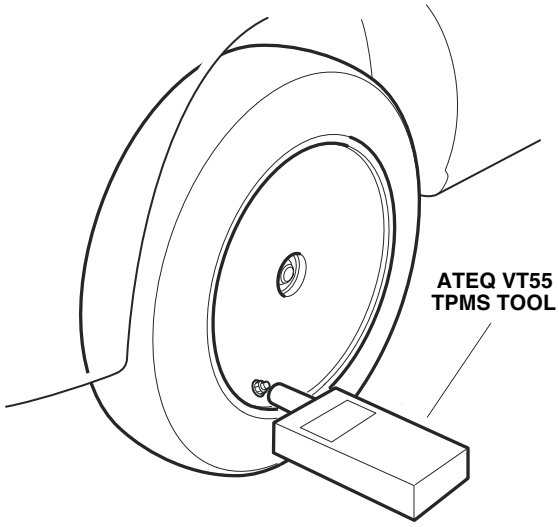

USE AND CARE

- Use a neutral detergent to clean the wheel.
- Rinse off the neutral detergent promptly after cleaning the wheel.

Be sure to give the wheel cleaning information to your customer.

All 46163 (1107)

© 2011 American Honda Motor Co., Inc. – All Rights Reserved.