HONDA

INSTALLATION INSTRUCTIONS

Accessory	Application	Publications No.
ROOF BOX (MULTI-PURPOSE) P/N 08L20-TA1-100A	**2013 ODYSSEY**	**AII 13280**
		Issue Date **AUG 2012**

Put this information in the glove box with the vehicle owner's manual.

PARTS LIST

Roof box

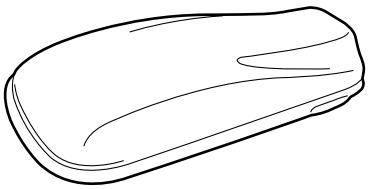

4 Brackets A

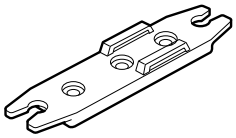

4 Brackets B

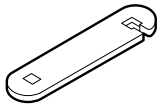

4 Plates

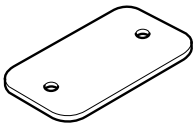

8 Knobs

8 Bolts

8 Washers

2 Straps

Seal

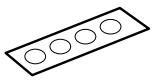

2 Keys

4 Large pads

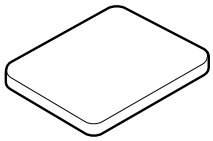

4 Small pads

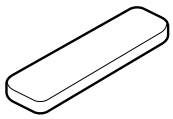

SUPPLIES REQUIRED

Isopropyl alcohol

Shop towel

INSTALLATION

NOTE:

- Be careful not to damage the roof and other finished surfaces of the body when installing the roof box.
- Do not allow the combined weight of the accessory and cargo to exceed the carrying capacity of the roof rack.
- An optional Honda roof rack (sold separately) is required to install the roof box.

1. With the help of an assistant, carefully place the box on the crossbars. Open the tailgate to make sure that the box is not interfering with the tailgate.

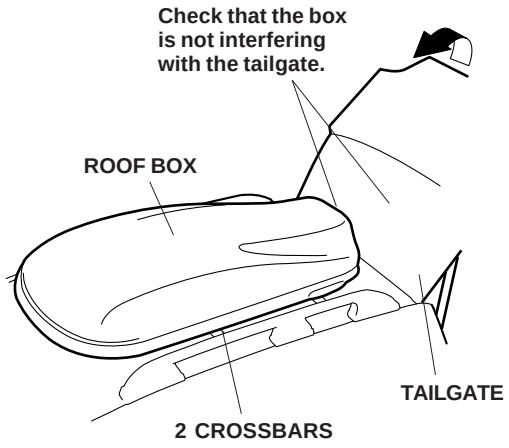

© 2012 American Honda Motor Co., Inc. - All Rights Reserved.

2. Open the roof box. Slide each plate forward or backward until the holes in the plate are over the front roof rack crossbar.

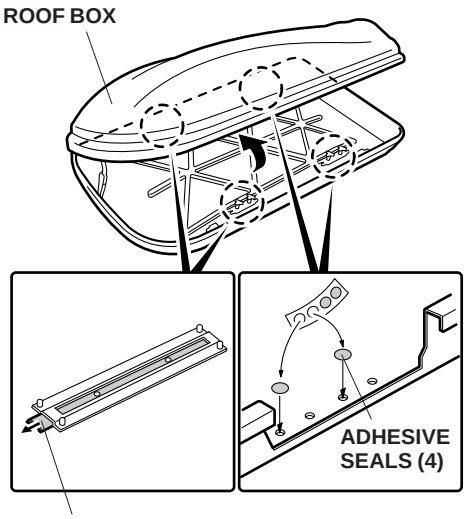

3. Attach adhesive seals over the unused rear mounting holes in the bottom of the roof box. The seals help prevent water from entering the roof box. Remove the roof box from the vehicle.

4. Using isopropyl alcohol on a shop towel, clean the four brackets B where the small pads will attach. Remove the adhesive backings from the small pads and attach them to the brackets B.

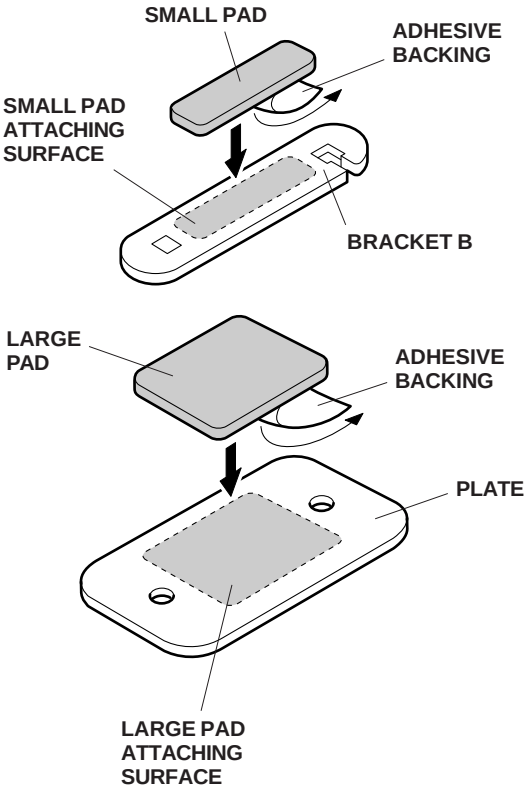

5. Using isopropyl alcohol on a shop towel, clean the four plates where the large pads will attach. Remove the adhesive backings from the large pads and attach them to the plates.

All 47246 (1208)

© 2012 American Honda Motor Co., Inc. - All Rights Reserved.

6. At each mounting point, insert a bolt through bracket B, through the plate, and into the predrilled hole in the bottom of the roof box.
   - Install bracket B with the cutout facing the outside.
   - Make sure the pads on the plate and bracket B are facing each other.

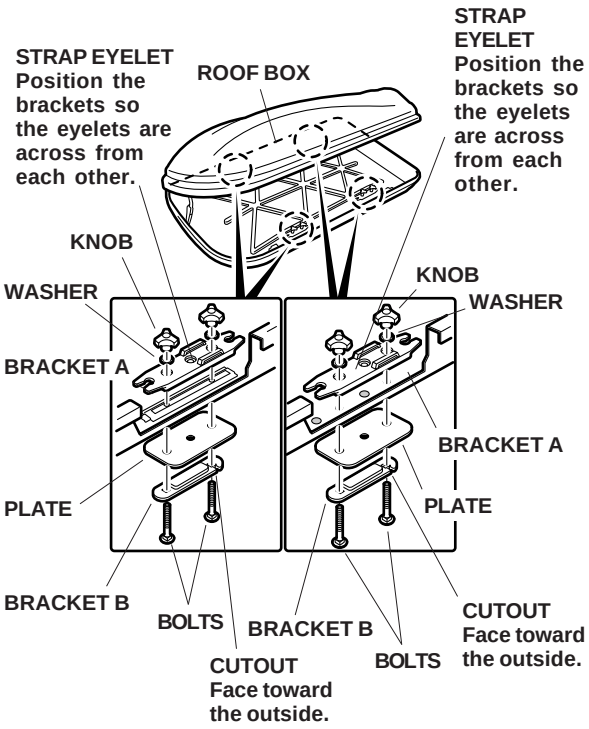

7. Fit bracket A over the threads of the bolt where it goes through the roof box. Install a washer over the threads, and loosely install a knob. Install a second bolt the same way. Install bracket A so that the right and left strap eyelets are positioned directly across from each other.

8. With the help of an assistant, carefully place the box on the crossbars. Be aware of the hardware hanging from the bottom of the box.

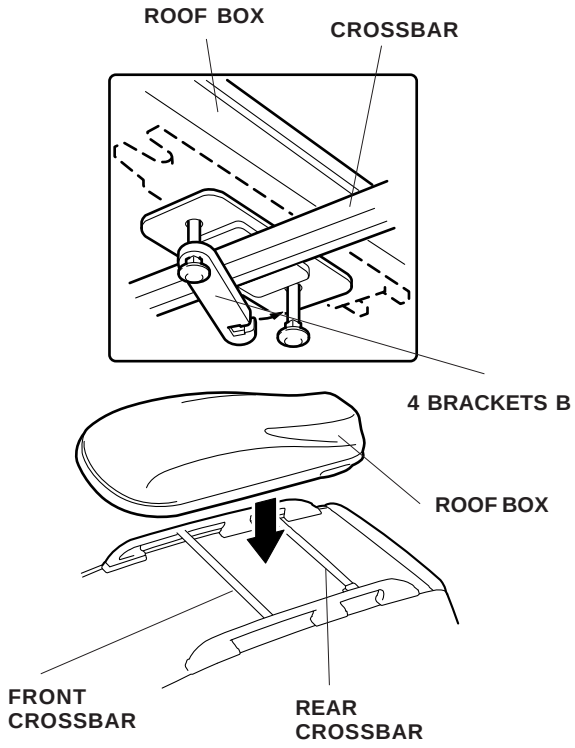

9. Arrange the plate to fit between the box and the crossbar. Swing the slotted end of bracket B around the bolt, and tighten the knobs. Fasten the box this way at all four mounting points.
   - If necessary, adjust the distance between the crossbars to match the distance between the predrilled holes in the roof box. The maximum possible distance between the crossbars should be used. Additional holes can be drilled in the bottom of the roof box without affecting its stability or load capacity. The minimum bar spread required is 21 5/8" for all racks.
   - The roof box should be centered on the crossbars and parallel to the direction of travel.

© 2012 American Honda Motor Co., Inc. - All Rights Reserved.

10. Insert the straps through the eyelets in the brackets A, and attach the straps together.

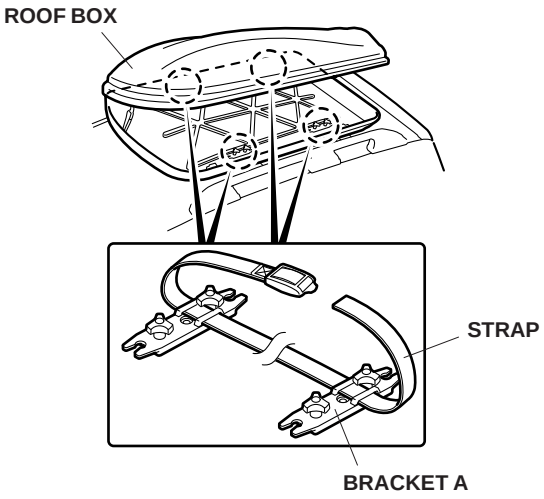

USE AND CARE

NOTE:

- This roof box can be opened from either side. However, the box can be opened from only one side at a time.
- Before opening the roof box from either side, be sure that the lid is securely closed on the other side.

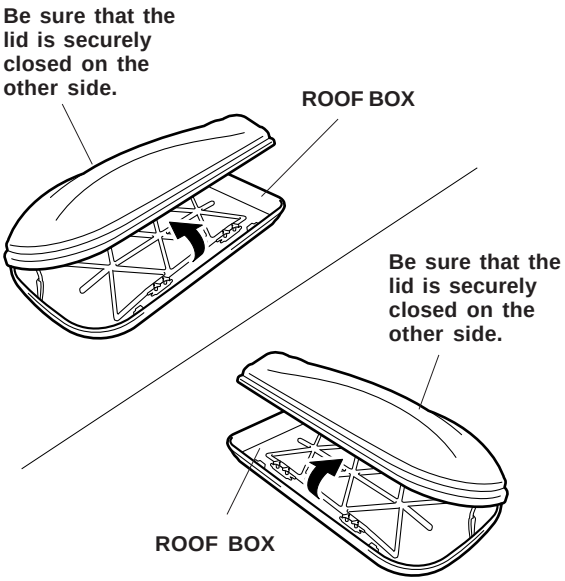

Unlocking/Locking the Roof Box

NOTE:

- The key is attached to the inside of the roof box.
- The locks work the same on either side of the box.

Unlocking: Insert the key into the lock and turn it counterclockwise to unlock. Press the center button while lifting the roof box lid.

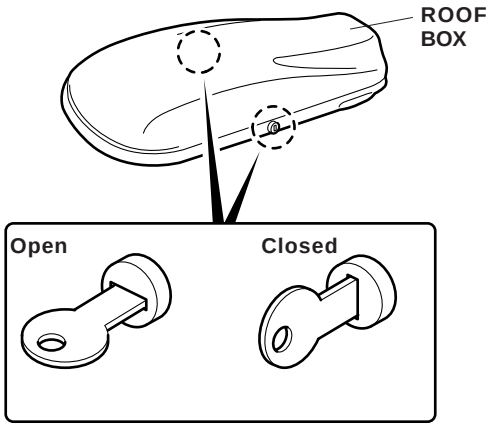

Locking: Press down on the lid. There should be an audible click. Be sure the lid is latched by attempting to lift the lid. Turn the key clockwise to lock the roof box. Remove the key while not in use. Be sure the straps are not outside of the roof box.

LOADING THE ROOF BOX

Load weight equally on both sides to minimize imbalance. Do not overload the roof box, the maximum allowable load is 110 lb (50 kg).

Loads must be secured with the straps to prevent them from sliding. Check the fasteners at regular intervals.

All 47246 (1208)

© 2012 American Honda Motor Co., Inc. - All Rights Reserved.